- Technical Paper -

INVESTIGATION OF PILOTIS FRAMES RETROFITTED BY OPENING TYPE THICK HYBRID WING-WALLS

Md. Nafiur RAHMAN*[1], Tetsuo YAMAKAWA*[2] and Yoichi MORISHITA*[3]

ABSTRACT

Based upon the retrofit concept of thick hybrid wall utilizing additional concrete sandwiched by steel plates and high strength steel bar prestressing, three pilotis frame specimens in which one is non-retrofitted standard one and the other two are opening type wing-wall are taken into account in this paper. The assessment of the various retrofit styles are experimentally investigated through the reversed cyclic loading tests under a constant vertical load having the axial force ratio of 0.2 per column only and they are analytically evaluated too.

Keywords: seismic retrofit, pilotis frame, thick hybrid wall, steel plate, high strength steel bar, lateral force resistance capacity, ductility.

1. INTRODUCTION

The investigations and observations after past earthquakes, in particular from the 1995 Hyogoken-Nanbu Earthquake in Japan revealed that many of the pilotis buildings (i.e., soft first story buildings), especially mid-rise RC frame buildings designed with both older and updated design codes had suffered the extensive structural and non-structural damages. Although, the presence of various kinds of walls (namely, spandrel walls, wing-walls) inadvertently increases the lateral strength, stiffness and energy dissipation capacity of the stories above the first story, this generally creates a structural vertical discontinuity of the stiffness and strength which can cause the formation of so-called soft-story mechanism in the first story during earthquake.

Based upon the past investigation by T. Yamakawa et al. [1], the retrofit technique utilizing additional concrete sandwiched by steel plates and high strength steel bar (referred to as PC bar hereafter) prestressing for one-sided wing wall RC column had been proposed for first story pilotis frames in the pilot test [2] that had been carried out in 2004. From the pilot test, it has been understood that the opening type wing-wall and the non-opening type panel wall laterally reinforced by steel plates and PC bar prestressing would be the new established techniques for retrofitting the pilotis frames. In the pilot test, the cyclic loading tests had been carried out on specimens with about 1/2.4 scale under a constant vertical load having the axial force ratio of 0.1 per column. For extensive investigations, based upon the above retrofit concept with considering various retrofit parameters, three specimens with subjected to a constant vertical load having the axial force ratio of 0.2 per column, in which one is non-retrofitted standard one and the other two are opening type wing-wall are considered in this paper. In this case, the size of the specimens had been reduced to about 1/3.4 scale due to the limitation of the maximum capacity of the lateral force application jack. The assessment of the various retrofit styles are experimentally investigated and also analytically evaluated.

2. TEST PLAN

In order to ascertain the effectiveness of the proposed retrofit technique, one shear critical non-retrofitted standard pilotis frame specimen in addition to two retrofitted opening type wing wall specimens were tested under the combination of cyclic lateral forces and a constant vertical load simultaneously. The shear span to depth ratio ($M/(VD)$) for column (clear height) was 2.5 and for beam (clear span) was 2.65. The scale factor of the specimens was about 1/3.4 to model a low-rise school building designed according to pre-1971 design code. The vertical axial force ratio ($N/(\sigma_B bD)$) was 0.2 per square column only. The reinforcement details of

*1 Graduate Student, Graduate School of Eng. and Science, Univ. of the Ryukyus, M. Eng., JCI Member
*2 Prof., Department of Civil Eng. & Architecture, University of the Ryukyus, Dr. Eng., JCI Member
*3 Associate Prof., Dept. of Civil Eng. & Architecture, University of the Ryukyus, Dr. Eng., JCI Member

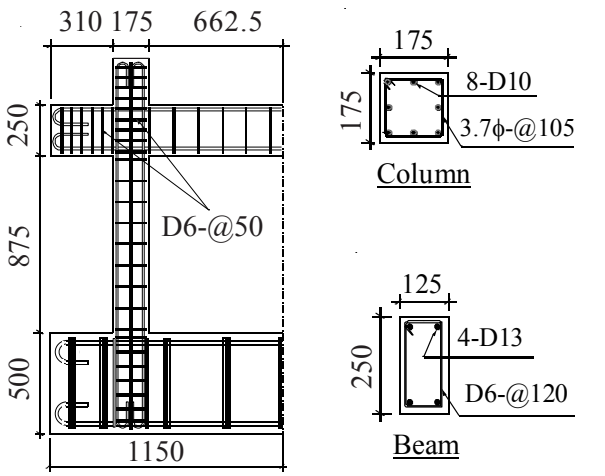

Fig. 1 Details of reinforcement (unit: mm)

Table 1 Properties of steel materials

		a (cm^2)	f_y (MPa)	ε_y (%)	E_s (GPa)
Rebar	D10	0.71	405.8	0.23	173.6
	D13	1.27	331.1	0.19	174.7
	D16	1.99	327.1	0.19	175.0
Hoop or Stirrup	3.7ϕ	0.11	560.3	0.29	191.5
	D6	0.32	443.2	0.27	164.3
PC bar	13ϕ	1.33	1220.0	0.61	200.0
Steel plate	t=2.3 mm	-	286.0	0.12	236.0

Notes: a=cross sectional area; f_y=yield strength of steel; ε_y=yield strain of steel; E_s=Young's modulus.

frame and the mechanical properties of steel materials employed in the test specimens are shown in Fig. 1 and Table 1 respectively. The retrofit details of the test specimens are illustrated in Table 2.

The test specimen R05P-P0 is non-retrofitted one in which shear failure in column is likely to happen. The specimens R05P-OR and R05P-OS were retrofitted by cast-in-situ wing-walls with opening inside the frame. In this retrofit technique, the main square column was encased with steel channel and then the additional thin steel plates (thickness =2.3mm) were connected with this steel channel utilizing PC bars (diameter=13mm) to form a formwork with opening equal to the same width of column. This opening is filled up with additional concrete to make it as a hybrid wall. After hardening of post-cast concrete, initial tension force prior to loading test was applied in PC bars that were penetrated across the wall beforehand. Epoxy was also grouted to eliminate the gap within the column surface and the steel channel. Moreover, in specimen R05P-OR, additional transverse reinforcements were provided inside the wing-wall to protect the spalling of cover concrete. In opening type wing-wall specimens, no additional longitudinal reinforcement or stud dowel was provided inside the wing-wall.

The test setup and loading program are illustrated in Fig. 2. The constant vertical load was applied by servohydraulic actuators and the cyclic lateral force was applied by double acting jack system. The cyclic loading test was carried out in the range of drift angle ± 0.5%, ± 1.0%, ± 1.5%, ± 2.0%, ± 2.5% and ± 3.0% at two successive cycles, and ± 0.125%, ± 0.25%, ± 4.0% and ± 5.0% at one cycle.

3. EXPERIMENTAL RESULTS AND DISCUSSIONS

The observed cracking patterns at final drift angle and the experimental shear force *V*-story drift

Table 2 Details of test specimens (unit: mm)

	R05P-P0	R05P-OR	R05P-OS
Specimen	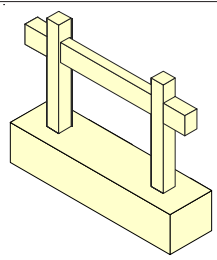	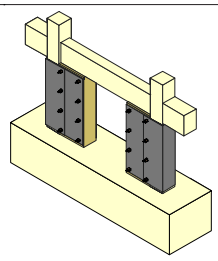	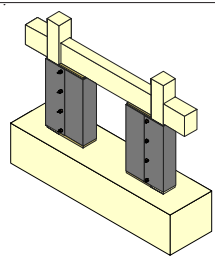
Cross section	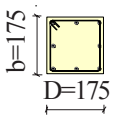	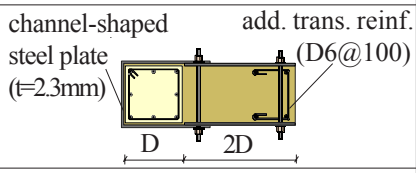	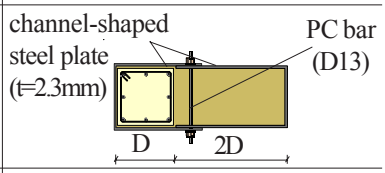
σ_B (frame)	28.3 (MPa)	28.3(MPa)	31.6 (MPa)
Common details	Axial force ratio, $N/(bD\sigma_B)$ = 0.2 (per column); Additional concrete, $\sigma_{B(add.)}$ = 32.3 (MPa); Reinf. in column:- main reinf.: 8-D10(p_g=1.85%), hoop: 3.7ϕ-@105 (p_w=0.12%); Reinf. in beam:- main reinf.: 4-D13, (p_g=1.63%), stirrup: D6-@120 (p_w=0.43%).		

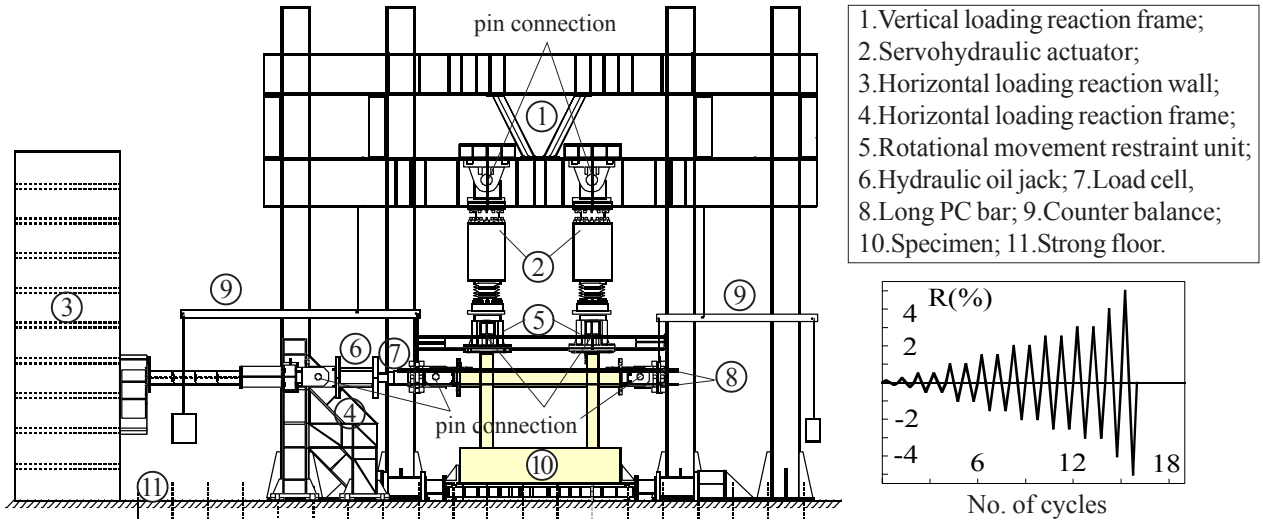

Fig. 2 Test setup and loading program

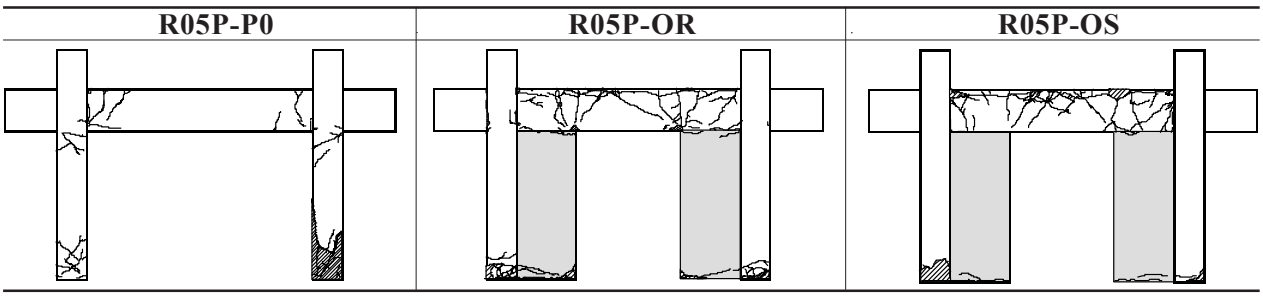

Fig. 3 Observed cracking patterns at final drift angle

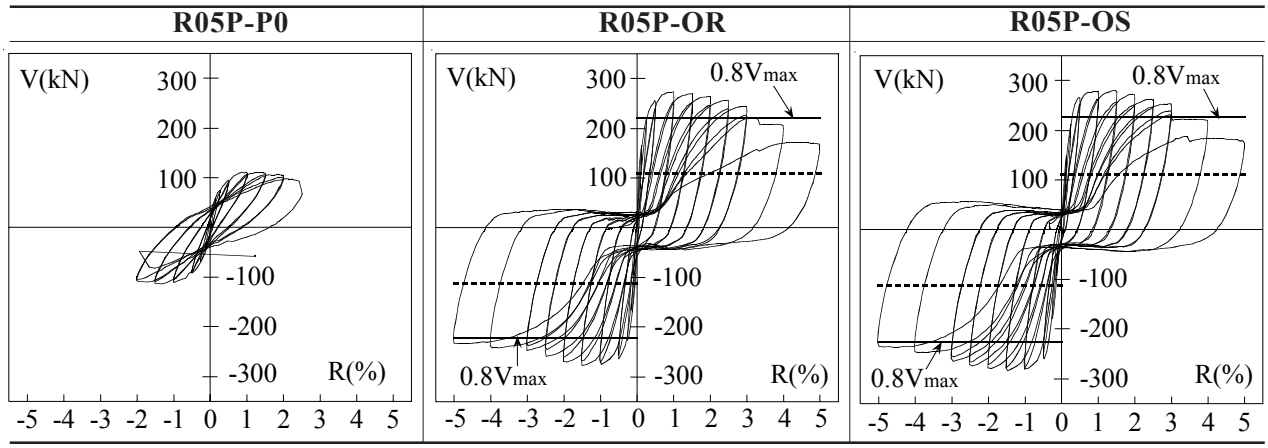

Note: Dotted lines indicate the experimental lateral capacity of non-retrofitted frame.
Loading direction from left to right is push (+) and vice versa.

Fig. 4 Experimental *V-R* relationships

angle *R* relationships are illustrated in Fig. 3 and Fig. 4 respectively. The cracking patterns of the retrofitted specimens were detected by detaching the steel plates after finishing the test.

In non-retrofitted standard specimen R05P-P0, flexural crack appeared in column and beam at a drift angle of about 0.5% and 1.0% respectively. The longitudinal rebar in column started yielding at *R*=1%. The shear crack generated in column at *R*=1.5% and with the increase of drift angle the cracks widened progressively. At *R*=2.5% in push (+) direction at first cycle, the width of shear crack generated in right column (cyclic load from left to right is push and vice versa) was about 5mm. Then in pull (-) direction at same cycle of same drift angle, the right column collapsed suddenly by shear failure.

In retrofitted specimen R05P-OR, the plastic hinges formed in beam and at the bottom of column with wing-wall. Since the column with additional wing-wall was united firmly, the rigid body rotation

was appeared within the formed plastic hinges. Moreover, during the cyclic loading, the beam was subjected to a remarkable axial force, and due to this axial force, the flexural strength of beam increased and it might exceed the bond strength. Therefore, with the increase of drift angle, the damage on beam due to bond degradation occurred progressively. Here, the concentrated axial force was working in beam, but in practical cases the axial force would be distributed force and the beam would be strong enough due to the presence of floor slab and shear walls in uppar stories. However, the lateral force resistance capacity almost maintained until about R=3% and after that decreased gradually due to the broken of longitudinal reinforcement in column. Here, the experimental lateral force resistance capacity increased to about 2.5 times the capacity of non-retrofitted pilotis frame. Moreover, in this specimen, the additional transverse reinforcements were provided inside the wing-wall to protect the spalling of concrete in exposed face of wing-wall and experimentally it had been proved to be effective.

In specimen R05P-OS, which was almost similar to specimen R05P-OR except the wing-wall was covered by channel-shaped steel plate in lieu of additional transverse rebar as in R05P-OR, the experimental hysteretic behaviour was absolutely resembled to that of R05P-OR. So, in viewpoint of economy and seismic performance, the utilization of additional transverse rebar instead of channel-shaped steel plate to protect the spalling of concrete in exposed face of wing-wall would be effective.

4. ANALYTICAL INVESTIGATION

In order to suggest the design guidelines of retrofit technique proposed for pilotis frames, the analytical investigations are carried out to confirm the test results. The experimental skeleton curves and the calculated lateral capacity (for flexural and shear failure) of the specimens decided by possible mechanisms are compared in Fig. 9. The simplified methods to calculate shear and flexural strength of members and lateral force resistance capacity of specimens are briefly explained in the followings.

4.1 Shear Strength

The shear strength of beam and square column are calculated by AIJ design guideline equations [3]. However, in case of poor transverse reinforcement that employed in shear critical column of non-retrofitted standard specimen, the Arakawa's mean equation can better estimate the value of shear strength. Moreover, for calculation of shear strength in case of one-sided wing wall column, the modified

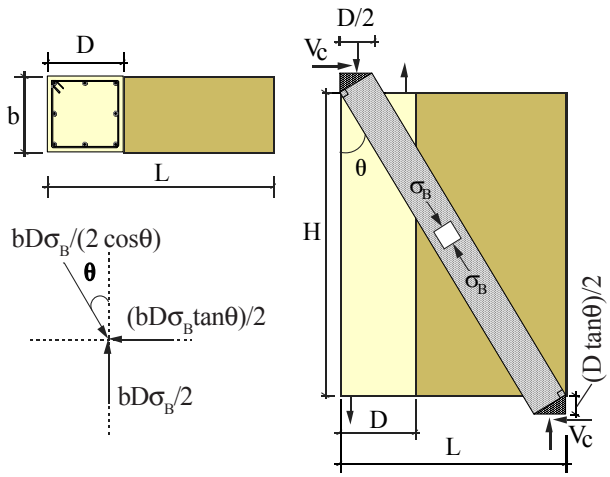

Fig. 5 Mechanism of shear strength for wing-wall column

equations based on the AIJ design guidelines for independent column are proposed here. According to the modification, the shear strength (V_c) for the one-sided wing wall column can be calculated as the following equations by taking into account the arch mechanism only as briefly illustrated in Fig. 5.

$$V_c = (\sigma_B bD \tan\theta)/2 \quad (1)$$

$$\tan\theta = (\sqrt{H^2 - D^2 + 2DL} - H)/D \quad (2)$$

where,

σ_B : cylinder strength of concrete
b : width of the section
D : depth of the column section only
L : total depth of column with wing-wall
H : height of wing-wall column

Since the wing wall column is confined by steel plates and PC bar prestressing, the coefficient for the effective compressive strength of compression strut in arch mechanism is assumed to unity. Moreover, as there is no additional longitudinal anchorage rebar inside the wing wall, the effective width of compression strut in arch mechanism is assumed to be half of the depth of square column only and the compression strut angle of this arch mechanism is derived accordingly.

4.2 Flexural Strength

The flexural strength of beam and square column are calculated by AIJ simplified equations [3]. For retrofitted opening type wing wall specimens, the flexural strength of column with wing-wall is calculated by considering as a unified section. Moreover, since the strength of additional concrete (see Table 2) is nearly equal to that of bare frame, for simplicity, the concrete strength for unified section is assumed as same of bare frame. Since the unified

wing-wall column section is asymmetric about the center line of square column section, therefore, during the cyclic loading, the section has two different moment capacity depending on the situation of compression or tension either in column side or in wall side. The flexural strength of this unified section is calculated more accurately by fiber model. In fiber model analysis, the constitutive law of concrete is considered according to Mander's model [4]. As an alternative to calculate the flexural strength of this unified wing-wall section, the simplified method based on widely accepted ACI concept of an equivalent rectangular stress block for concrete in compression [5] can also be applied. For one-sided wing-wall column, the comparison of axial force (*N*)-moment (*M*) interaction diagrams calculated by fiber model and ACI method by considering the axial force acting at center of square column is shown in Fig. 6.

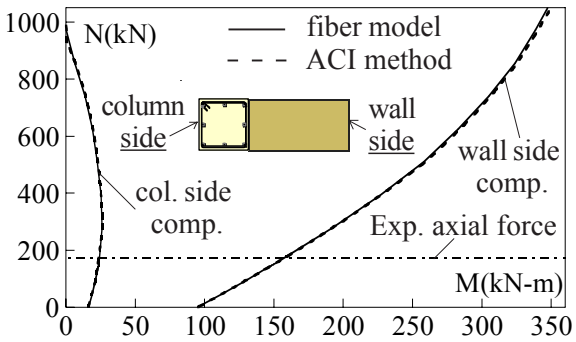

Fig. 6 Comparison of *N-M* interaction diagrams by fiber model and ACI method

4.3 Lateral Force Resistance Capacity

The lateral force resistance capacity of non-retrofitted bare frame and retrofitted frame with opening-type wing-wall column are apporximately estimated based on the mechanism of plastic hinge formation. In this calculation, the beam-column connection is assumed as rigid and the dimension of model frame is considered as the centerlines of beam and square column. Moreover, in case of retrofitted frame with opening type wing-wall, the effective shear span of beam is selected as the distance between contact points of beam and wing-wall (here assumed distance between plastic hinges of beam in Fig. 9). The maximum sectional moment of beam and column is taken into account at the end of effective span of beam and at the clear height of column respectively. To decide the plastic hinge either at beam or column, the end moments of beam and column are linearly interpolated and compared at their intersection point. The flowchart of calculation procedures of this simple method is illustrated in Fig. 7.

4.4 Selection of Steel Plate Thickness and Diameter of PC bar

The steel plate thickness is selected from Eq. 3 which is derived by equating equivalent horizontal component of punching shear strength of steel plate through vertical sections with shear strength of wing-wall column calculated by arch mechanism according to Eq. 1. After selecting steel plate thickness, the diameter and minimum number of PC bars are

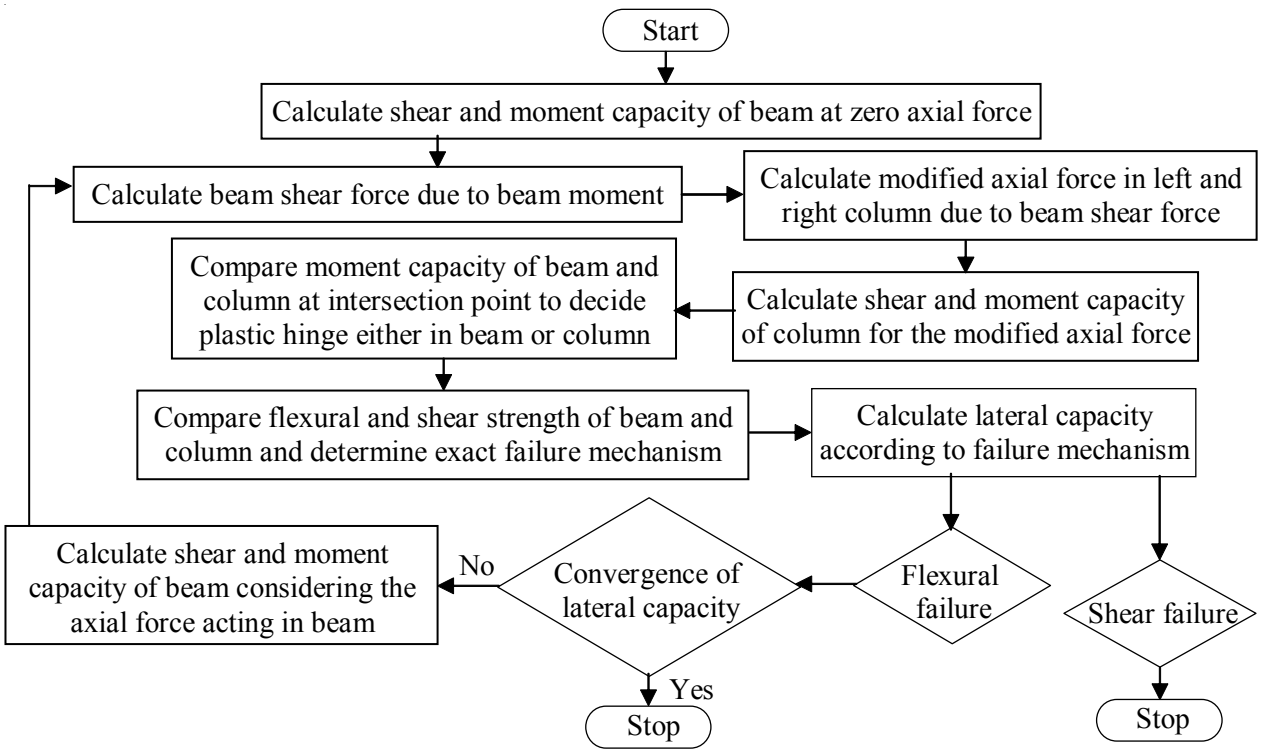

Fig. 7 Flowchart for calculation of lateral force resistance capacity

calculated from Eq. 4 which is derived by equating the tensile strength of steel plate in vertical section with punching shear force of total PC bars. The selection techniques of steel plate thickness and PC bar diameter are illustrated in Fig. 8. However, total number and spacing of PC bars have to be selected according to construction requirements.

$$t = \sqrt{3}V_c/(2f_sL) \quad (3)$$

$$n = 4\sqrt{3}Htf_s/(\pi d^2 f_p) \quad (4)$$

where,

t : thickness of steel plate
L : total depth of column with wing wall
H : height of wing-wall column
V_c : shear strength of wing-wall column by arch
f_s : minimum between yield strength and 70% of ultimate strength of steel plate
f_p : yield strength of PC bar
d : diameter of PC bar
n : total no. of PC bar

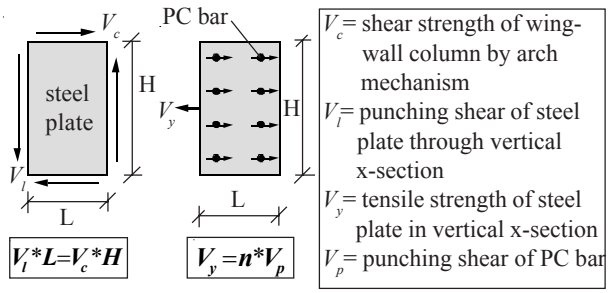

Fig. 8 Selection techniques of steel plate thickness and diameter of PC bar

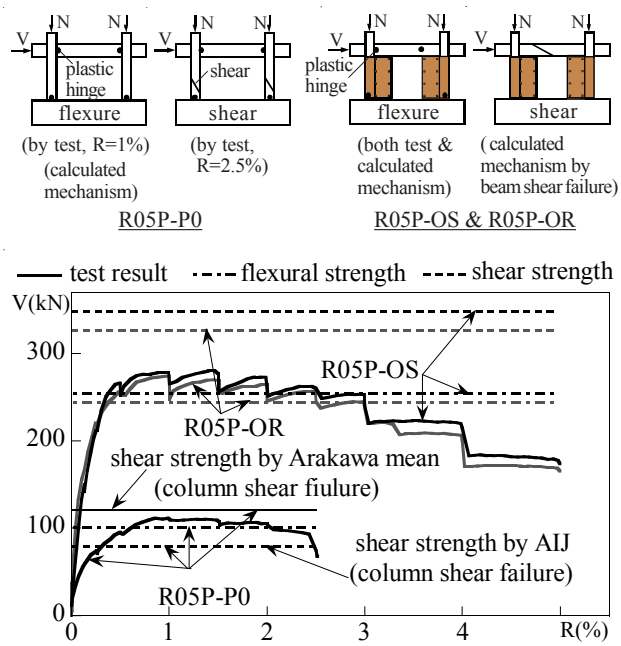

Fig. 9 Comparison of test & calculated results

5. CONCLUSIONS

(1) The retrofit technique utilizing opening type extremely thick hybrid wing-walls without additional longitudinal reinforcement inside the wing-wall like column enhances both the lateral strength and ductility.

(2) In the viewpoint of economy and seismic performance, the utilization of additional transverse reinforcement instead of channel-shaped steel plate to protect the spalling of concrete in exposed face of wing-wall would be effective.

(3) In the above retrofit technique, steel plate and PC bar can act as a formwork and form-tie as well as shear strengthening. Moreover, the wing wall column is united firmly so that it can act as a unified member to increase the both flexural and shear strength.

(4) In the context of design and assessment, the simplified methods can be applied as an alternative to calculate the lateral force resistance capacity as well as the flexural and shear strength of the wing-wall column.

ACKNOWLEDGMENTS

The investigation reported herein was carried out possible by a financial support of the Grant-in-aid for the Scientific Research (B) , (17360272), 2005, by Japan Society for the Promotion of Science. The another research grant was provided for Construction Technology, Research and Development by Ministry of Land Infrastructure and Transport, Japan.

REFERENCES

[1] Rahman, M. N. & Yamakawa, T., "Experimental and Analytical Investigation of Seismic Retrofit for One-sided Wing-wall RC Columns," Proceedings of the Japan Concrete Institute (JCI), Vol. 26, No. 2, pp. 1351-1356, 2004.

[2] Rahman, M. N., Yamakawa, T., Morishita, Y. & Nakada, K., "Investigation of Seismic Retrofit for Pilotis Frames Utilizing Extremely Thick Hybrid Walls," Proc. of the Japan Concrete Institute (JCI), Vol. 27, No. 2, pp. 1117-1122, 2005.

[3] Architectural Institute of Japan (AIJ), "Design Guidelines for Earthquake Resistant Reinforced Concrete Building Based on Inelastic Displacement Concept," 1999. (in Japanese)

[4] Mander, J. B., Priestley, M. J. N. & Park, R., "Theoretical Stress-Strain Model for Confined Concrete," J. of Structural Engineering, ASCE, Vol. 114(8), pp. 1804-1826, Aug., 1988.

[5] ACI Committee 318, "Building Code Requirements for Reinforced Concrete (ACI 318-89) and Commentary, 1989.