論 文

[2172] IMPLEMENTATION OF BEM ANALYSIS IN MODE-I FRACTURE OF CONCRETE BEAMS

Ali Hassan CHAHROUR*1, Masayasu OHTSU*2 and Tetsuya SAKAMOTO*3

1. INTRODUCTION

Cracking is an essential feature of the behavior of concrete structures. Even under service loads, some structures are full of cracks and the life of such structures are governed by continuous growth of crack-like defects. In this respect, fracture mechanics is useful for investigating the tensile failure created by crack growth under the action of tensile stresses, and determining parameters governing the failure process. Tensile strength, fracture energy and tensile-softening curve are known as the parameters which define mechanical behaviors of concrete in the fracture process zone.

In the present paper, mode-I fracture of simply supported center-notch beams under four-point bending is investigated for plain concrete and steel-fiber reinforced (SFR) concrete. Here, SFR concrete with two kinds of fiber ratios are considered to study the effect on the fracture toughness. Numerical simulation by the boundary element method (BEM) is carried out to investigate crack propagation of the beams, based on the tensile softening model and the linear elastic fracture mechanics (LEFM). In the case of LEFM, two-domain BEM analysis is also performed with the aim of extending the analysis to mixed-mode problems later on. Acoustic emission (AE) measurement is applied to experiments to determine the critical stress intensity factor of mode-I failure of concrete. Fracture behaviors obtained in the experiments of four-point bending beams are compared with analytical results to study the applicability of the BEM analysis.

2. EXPERIMENT

Mix proportions and mechanical properties of concrete are given in Table 1. Labels SFR1% and SFR3% indicate steel-fiber reinforced concrete with steel fibers (0.5 mm x 0.5 mm x 30 mm) added to the mixture at 1 % and 3 % volume ratios, respectively. Compressive strength, tensile strength, Young's modulus, and Poisson's ratio in Table 2 are the averaged results of three cylindrical specimens of 10 cm diameter and 20 cm height, tested after 28-day moisture curing. It is noted that the tensile strength significantly increases with the increase of volume fraction of steel

*1 Graduate School of Kumamoto University
*2 Department of Civil & Environmental Engineering, Kumamoto University
*3 Tobishima Corporation

fiber, while the decrease of Young's modulus due to the increase of fiber ratio may be attributed to incomplete compaction.

10 cm x 10 cm x 40 cm center-notched beams with 2 cm and 4 cm notch depths were tested by using a servo-valve controlled loading machine, which enables us to obtain complete load-CMOD (crack mouth opening displacement) curves. CMOD was measured by a clip gauge inserted at the notch bottom of the beam. The load was applied through a load cell at the rate of 0.0005 mm/s, 0.001 mm/s, and 0.002/s for Plain, SFR1%, and SFR3%, respectively. An experimental set-up is shown in Fig. 1. AE events were monitored by an AE sensor, a pre-amplifier, a discriminator, and a counter.

Table 1 Mix proportion of concrete

Specimen type	Water-cement ratio(%)	Unit weight (kg/m³)			
		Water	Cement	Sand	Gravel
Plain	45	169	375	703	1160
SFR1%	45	169	375	692	1142
SFR3%	45	169	375	671	1107

Table 2 physical properties of concrete

Specimen type	Slump (cm)	Air content (%)	Compressive strength σ_c(kgf/cm²)	Tensile strength σ_t(kgf/cm²)	Young's modulus E(kg/cm²)	Poissons ratio
Plain	13.3	2.6	370.5	32.6	3.00×10^5	0.21
SFR1%	2.3	4.6	439.1	40.2	3.29×10^5	0.20
SFR3%	0.7	4.3	515.7	76.0	2.81×10^5	0.21

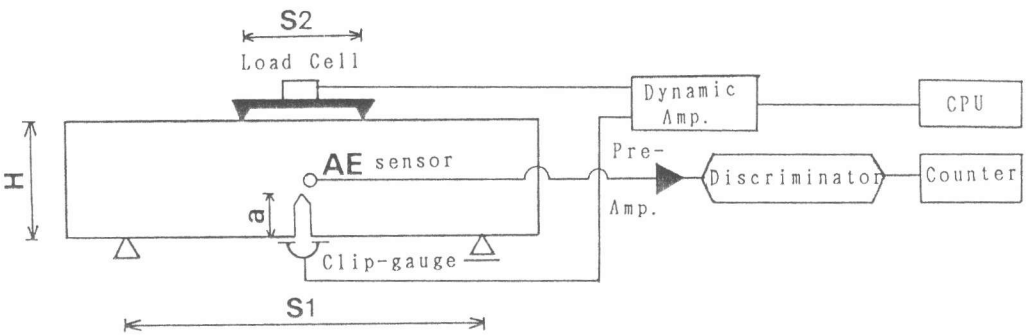

Fig. 1 An experimental set-up of a center-notched beam

The critical stress intensity factor K_{Ic} was determined from P_{AE}, which corresponds to the load level at which both AE event counts and CMOD values increase acceleratedly [1], based on the following equation;

$$K_{Ic} = 3P_{AE}(S1-S2)(a)^{0.5}Y(a/H)/(2BH^2), \quad (1)$$

where $Y(a/H) = 1.99 - 2.47(a/H) + 12.97(a/H)^2 - 23.17(a/H)^3 + 24.8(a/H)^4$.

B is the beam width and the other terms of the equation are defined in Fig. 1. Taking into account mechanisms of matrix-cracking in fiber composites [2], modified values of Young's modulus, E_{MD}, and the fracture toughness, K_{MD} were introduced, as follow;

$$E_{MD} = E_m V_m + E_f V_f, \tag{2}$$

$$K_{MD} = K_{Ic} E_{MD} / E_m, \tag{3}$$

where E_m and E_f are Young's moduli of the matrix and the steel fiber ,and V_m and V_f are volume fractions of the matrix and the steel fiber.

For the tensile-softening model, a linear model was adopted. Based on the RILEM recommended G_F method [3], the fracture energy was computed from the difference of the area under the load-CMOD curves of 2 cm-notch beams and of 4 cm-notch beams. All fracture mechanics parameters determined in the experiments are summarized in Table 3.

Table 3 Fracture mechanics parameters

Concrete	σ_t (kgf/cm²)	E (kg/cm²)	K_{Ic} (kg/cm$^{1.5}$)	E_{MD} (kg/cm²)	K_{MD} (kg/cm$^{1.5}$)	G_{Ic} (kg/cm)	ω_c (x10^{-2}mm)
Plain	32.6	3.00x10^5	53.7	3.00x10^5	53.7	0.00922	0.566
SFR1%	40.2	3.29x10^5	66.3	3.18x10^5	70.3	0.0128	0.637
SFR3%	76.0	2.81x10^5	125.3	3.54x10^5	147.9	0.0536	1.410

3. ANALYTICAL MODELS

BEM analysis was performed for the two-dimensional plane strain state. The linear tensile softening model was applied to the BEM model of the right-half portion of the beam, due to the symmetry of boundary conditions. This model is shown in Fig. 2, which referred to as a half-beam model. In the case of the LEFM analysis based on BEM [4], another model was introduced along with the half-beam model. The procedure is known as two-domain BEM [5]. Here, the model is called a whole-beam model as shown in Fig. 3.

BEM modeling is done by discretizing the boundary into linear elements, which are identified by two end nodes and at which loads are applied. The boundary on both the ligament and the notch is discretized into elements of 2.5 mm length, while the other boundary is divided into 1.25 cm coarse meshes. For the whole-beam model, the integral equations are considered for both domains separately. Stitching the two domains based on the continuity conditions at the ligament interface, eventually the two equations yield a linear algebraic system.

4. PROCEDURE OF ANALYSIS

In the numerical analysis, it is assumed that a crack starts at the notch tip and propagates upward along the ligament until the beam failure.

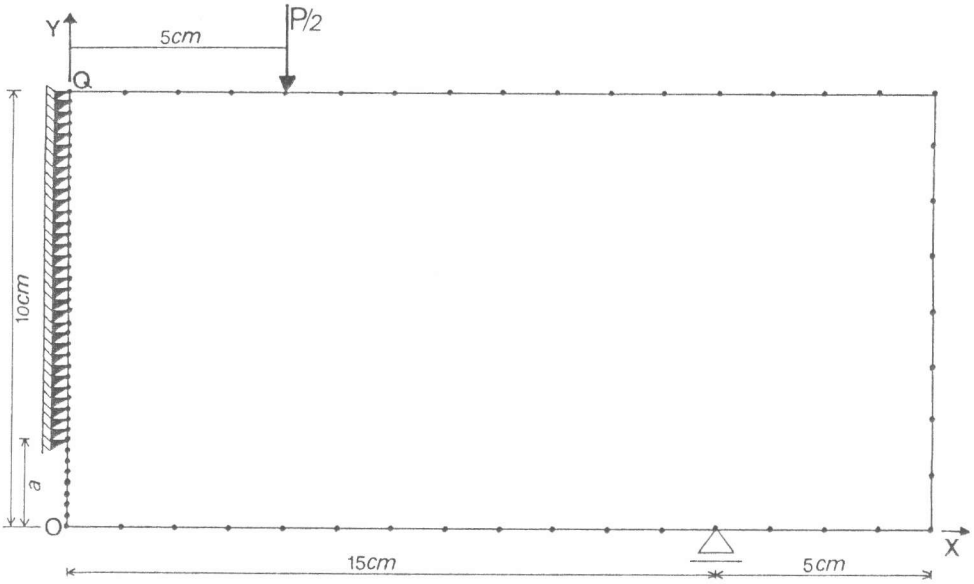

Fig. 2 Half-beam model

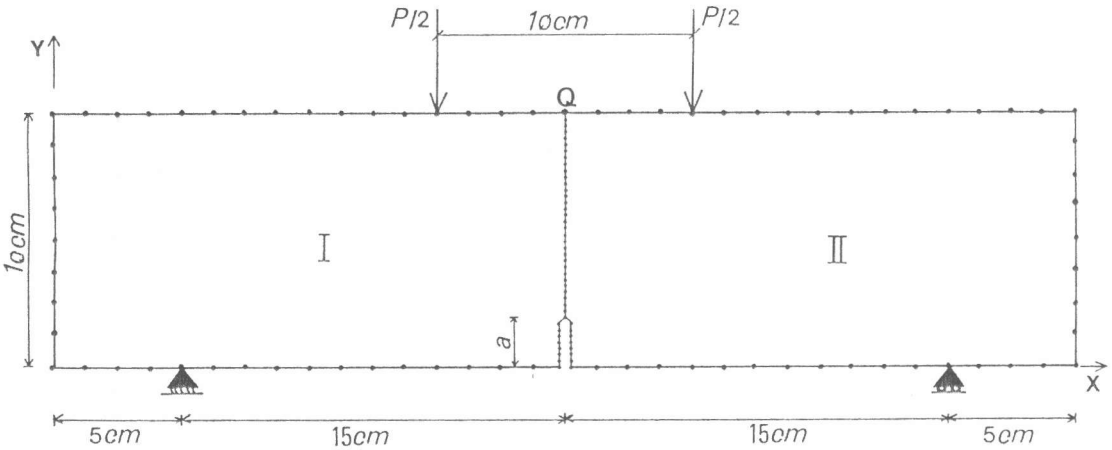

Fig. 3 Whole-beam model

In the tensile softening model, the crack propagates when the stress at the crack tip becomes equal to the tensile strength of concrete. The analytical procedure was already reported elsewhere [6].

In the LEFM analysis, the critical K_{Ic} is employed as the criterion for crack propagation as in the previous paper [7], where the crack front is advanced in the case of K_I determined greater than K_{Ic}. Here, K_I was determined from relative displacement Δu of nodes at distance r from the crack tip as shown in Fig. 4 and is represented,

$$K_I = E(\pi/2r)^{0.5}\Delta u/(4 - 4\nu). \tag{4}$$

In the case of the whole-beam model, $\Delta u = u_D - u_B$ and the displacement u_B

is doubled for the half-beam model. A flow chart of the analysis is shown in Fig. 5.

5. RESULTS AND DISCUSSION

For the case of 2 cm notch beams, the load-CMOD curve of Plain is shown in Fig. 6 and that of SFR1% is shown in Fig. 7. In the figures, all results of the experiments labeled as "Expt.", analytical results by the tensile softening model as "Coh.", those by the half-beam model as "LEFM(half)", and those by the whole-beam model as "LEFM(whole)" are plotted. Although the agreement between the experimental results and the analytical results is not excellent, all analytical results reproduce essential feature of the experimental load-CMOD curves. It is noted that the analytical results of LEFM(half) are pretty close to those of Coh. in the early stage and further the unloading behaviors are similar except the load values. The results of LEFM(whole) evaluate less load-bearing capacity than those of LEFM(half). It may result from the fact that the boundary conditions and the global stiffness of the models are different.

In the case of Plain concrete, both the results of LEFM(half) and Coh. simulate global behaviors of the experiment, except for the initial compliance. The results of LEFM(whole) only agrees with the descending region. In the case of SFR1% concrete, any analytical results could not simulate nonlinear strain-hardening-

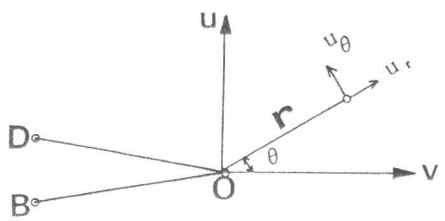

Fig. 4 Linear element at crack tip

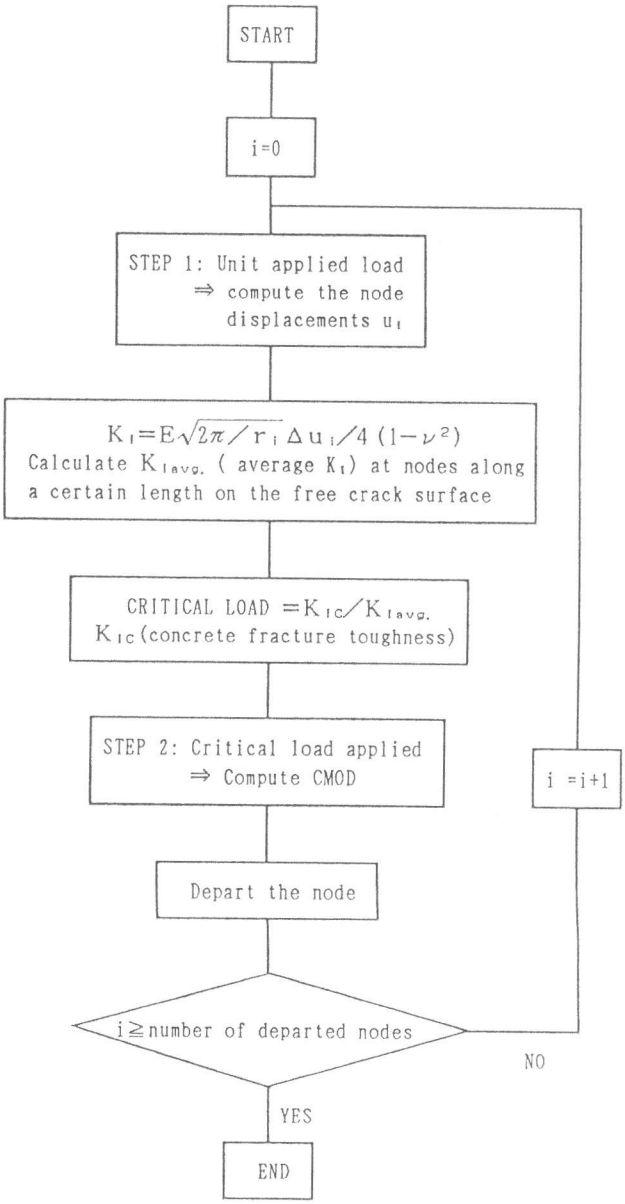

Fig.5 Flow chart of the LEFM analysis

like region of the experimental results. The results of modified Young's modulus and toughness are indicated as LEFM(half-mode.) and LEFM(whole-mod.). Although the additional increase of the toughness is clearly observed, the unloading branch could not recovered enough even in this procedure. This is partially because the load-CMOD curve of 2 cm notched beams did not closely intersect that of the 4 cm notched beams in the range of the experiment. It implies that fracture energy obtained may be less estimated and further investigation is needed to taken into account the effect of steel-fiber reinforcement on the fracture toughness in the LEFM treatment.

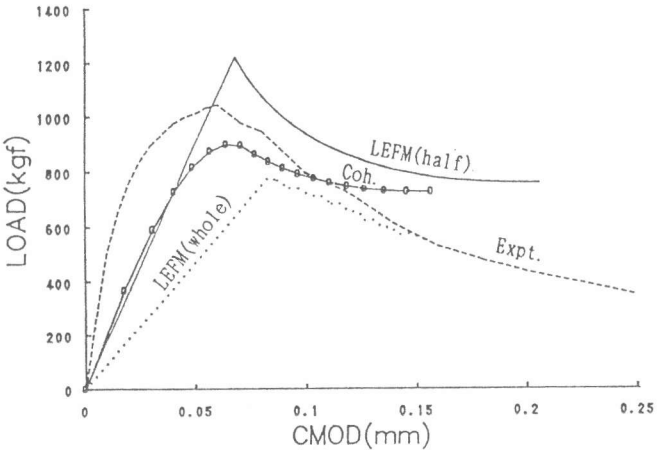

Fig. 6 Load-CMOD curves (Plain; 2 cm notch)

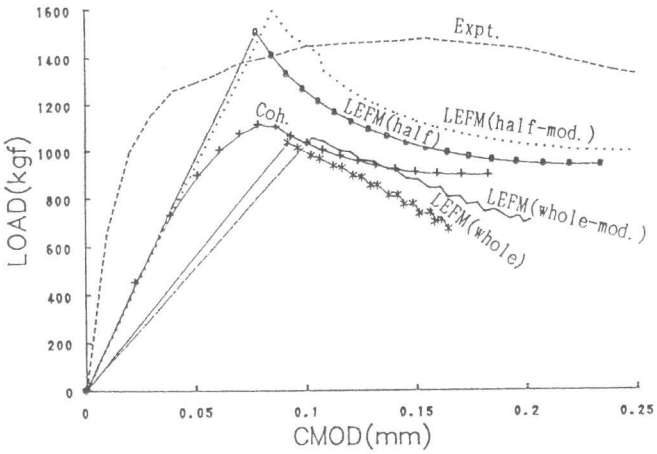

Fig. 7 Load-CMOD curves (SFR1%; 2 cm notch)

6. CONCLUDING REMARKS

This research aims at investigating the application of BEM analysis to mode-I fracture of concrete, based on the fracture mechanics. It is found that both the tensile softening model and the LEFM model are applicable to simulate mode-I failure of center-notched concrete beams.

REFERENCES

1) M. Ohtsu, Proc. of JCI, Vol. 11, No. 2, 1989, pp. 673-678.
2) D. B. Marshall, B. N. Cox and A. G. Evans, Acta Metall., Vol. 33, No. 11, 1985, pp. 2013-2021.
3) V. C. Li and R. J. Ward,Fracture Toughness and Fracture Energy, Balkema, 1989, pp. 183-195.
4) J. O. Watson, Developments in Boundary Element Methods-1, Applied Science Publishers, 1979, pp. 31-63.
5) T. A. Cruse, Kluwer Academic Publishers, 1988, 45-60.
6) JCI Colloquium on Fracture Mechanics of Concrete Structures I, 1990, pp. 55-65.
7) M. Ohtsu, Theoretical and Applied Fracture Mechanics, Vol. 9, No. 1, 1988, pp. 55-60.