論文 Determination of Buckling Length of Reinforceing Bars Based on Stability Analysis

Rajesh P. DHAKAL[*1] and Koichi MAEKAWA[*2]

ABSTRACT: Average compressive stress-strain relationship of reinforcement is sensitive to buckling length. The aim of this study is to propose an analytical method to predict the buckling length of longitudinal bars restrained by lateral ties inside RC structures. Stability analysis is conducted giving due consideration to both geometrical and mechanical properties of the longitudinal and lateral reinforcements. The required tie stiffness is derived from energy principle and compared with actual stiffness to determine the stable buckling mode.
KEYWORDS: energy principle, buckling length, stability analysis, tie spacing, tie stiffness

1. INTRODUCTION

Reinforcing bars, when subjected to axial compression exhibits large lateral deformation (hereafter referred to as buckling) especially after the absolute compressive strain becomes higher than the yielding strain. One of the most important parameters that govern the stress-strain relationship [1] of reinforcing bars in compression is buckling length to bar diameter ratio. In the compression tests of bare bar, the buckling length is equal to the supported length of the test piece. But for the reinforcing bars inside reinforced concrete members, this definition of buckling length does not apply. Hence, the determination of length to diameter ratio, in such cases, becomes difficult and requires proper consideration of interrelated mechanisms between main bar and lateral ties.

Previous researchers [2, 3, 4] have come up with different conclusions regarding the buckling length, varying from one to several times tie spacing. It is realized that the buckling length may extend to several times tie spacing depending on the arrangement and strength of lateral ties. However, if the size and spacing of the lateral ties are designed properly so that the stiffness of the stirrup is high enough to provide a rigid support to the longitudinal bar, it is ensured that the main reinforcement buckles between two adjacent stirrups. But, this is not always the case. Here, an analytical method to determine the buckling length is proposed.

2. ASSUMPTIONS AND GENERAL FLOW OF COMPUTATION

Longitudinal reinforcing bars are simulated as flexural members fixed to the lateral ties at two extreme ends of buckling length. Moment curvature (M-ϕ) relationship of elastic

*1 Department of Civil Engineering, University of Tokyo, Graduate Student, Member of JCI
*2 Department of Civil Engineering, University of Tokyo, Professor, Member of JCI

flexural member is given by $M=EI\phi$, where EI is the flexural rigidity. Because of its nonlinear nature, the flexural rigidity of reinforcing bar in post-yielding region is not unique and the exact value can be obtained through microanalysis. For simplicity, average flexural rigidity is assumed to be half of the elastic flexural rigidity for normal strength reinforcing bars. The average flexural rigidity of reinforcing bar is also influenced by its yield strength. For example, in case of high strength bars, the associated plasticity is comparatively smaller and the secant stiffness is also higher (figure 1). Consequently, the average flexural rigidity increases with increase in yield strength and vice versa. Finally, considering the influence of yield strength as well, the average flexural rigidity is assumed as $EI = E_sI/2\sqrt{(f_y/400)}$, where E_s, I and f_y (MPa) are Young modulus, moment of inertia and yield strength, respectively.

To define the deformational shape of the longitudinal reinforcement, boundary conditions ensuring zero lateral displacement and no slope at the end springs, are assumed. To fulfill these boundary conditions, a cosine curve, normally used for deformation of fixed end column, is used as shown in figure 1. The lateral ties are simulated by discrete elastic springs. In reality, the lateral ties show elasto-plastic behavior and after reaching the yield strain, the stiffness of the tie is reduced nearly to zero. The ties around the middle of the buckling length are prone to undergo high tensile strain due to large lateral deformation of the longitudinal bars. To cope with these facts, the springs within the central half of the buckling length are eliminated from the system, as shown in figure 1, for accurate prediction of required stiffness of other elastic springs.

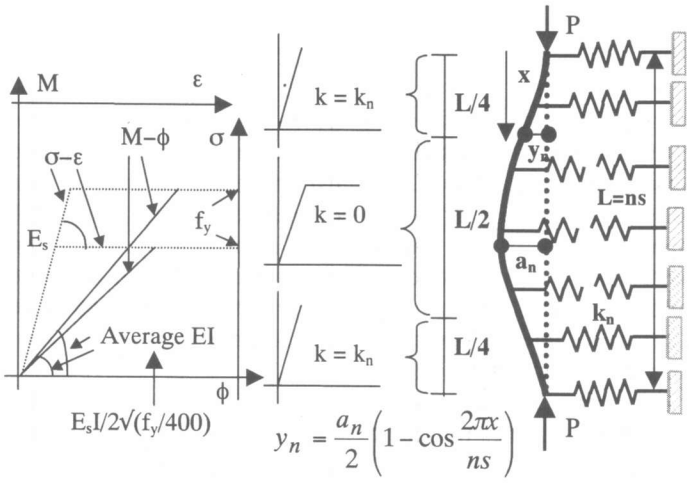

Figure 1. Simulation for stability analysis

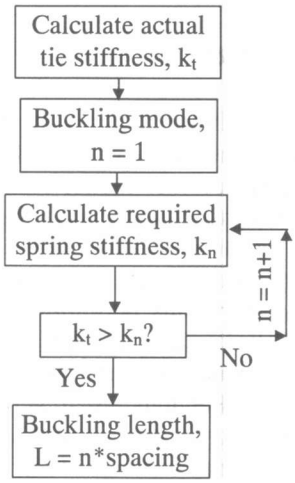

Figure 2. Flow-chart of entire process

The entire process of buckling length determination is illustrated with a flow-chart in figure 2. First, the actual tie stiffness effective to each longitudinal reinforcement is calculated. Next, the minimum spring stiffness required to hold the longitudinal reinforcing bars in different buckling modes is determined using energy principle, as stated later. For each buckling mode starting from 1, the required stiffness is compared with effective tie stiffness to check the stability of the reinforcements in corresponding buckling modes. The stable buckling mode is the smallest possible mode for which the required spring stiffness is less than the actual tie stiffness. The product of this stable buckling mode and the tie spacing gives the buckling length of the main reinforcement for the given arrangement of lateral ties.

3. FORMULATION

The derivation of required spring stiffness for an arbitrary mode (n^{th} mode) is explained below. Figure 3 presents the two possible modes of deformation (n and $n+1$) considered for the derivation. Here, we have to consider these two modes because we want to assess the spring stiffness so that the higher mode ($n+1$) is avoided. The lower modes are not considered because they are already checked in the previous steps and proved not to exist. The lateral displacement profiles of the longitudinal reinforcement in these two modes are also shown in figure 3.

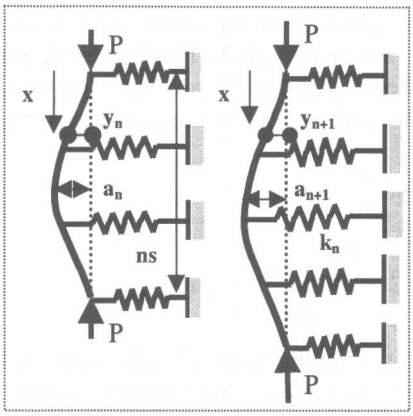

$$y_n = \frac{a_n}{2}\left(1 - \cos\frac{2\pi x}{ns}\right)$$

$$y_{n+1} = \frac{a_{n+1}}{2}\left(1 - \cos\frac{2\pi x}{(n+1)s}\right)$$

Figure 3. Determination of required spring stiffness for n^{th} buckling mode

The energy corresponding to each buckling mode includes the elastic strain energy of the reinforcement, energy stored in the elastic springs, and the energy due to shortening of the reinforcement. The total energy of the system, U, is calculated as the sum of energies associated to the two buckling modes, U_n and U_{n+1}. The energy associated with two consecutive buckling modes and total energy are given by following equations (eqs. 1-3).

$$U_n = \int_0^{ns} \frac{EI}{2}\left(\frac{d^2 y_n}{dx^2}\right)^2 dx + c_i \sum_{i=1}^{n} \frac{k_n}{2} y_n^{is\,2} - \int_0^{ns} \frac{P}{2}\left(\frac{dy_n}{dx}\right)^2 dx \tag{1}$$

$$U_{n+1} = \int_0^{(n+1)s} \frac{EI}{2}\left(\frac{d^2 y_{n+1}}{dx^2}\right)^2 dx + c_i \sum_{i=1}^{n+1} \frac{k_n}{2} y_{n+1}^{is\,2} - \int_0^{(n+1)s} \frac{P}{2}\left(\frac{dy_{n+1}}{dx}\right)^2 dx \tag{2}$$

$$U = U_n + U_{n+1} \tag{3}$$

Here, c_i is the coefficient to incorporate the plasticity of lateral ties. Hence, the value of c_i is 0 for the springs in the central half of the buckling length for representing plasticity and for the rest, it is 1. Similarly, EI is the flexural stiffness of the reinforcement and k_n and P are the critical spring stiffness and the axial load corresponding to the nth mode, respectively. Solving these equations by using the pre-described deformational shape, the total energy can be obtained, as shown in the following equations (eqs. 4-7).

$$U = U_f + U_k - U_P \tag{4}$$

$$U_f = \frac{\pi^4 EI}{s^3}\left[\frac{a_n^{\ 2}}{n^3} + \frac{a_{n+1}^{\ 2}}{(n+1)^3}\right] \tag{5}$$

$$U_k = c_i \frac{k_n a_n^{\ 2}}{8}\sum_{i=1}^{n}\left(1-\cos\frac{2i\pi}{n}\right)^2 + c_i \frac{k_n a_{n+1}^{\ 2}}{8}\sum_{i=1}^{n+1}\left(1-\cos\frac{2i\pi}{(n+1)}\right)^2 \tag{6}$$

$$U_P = \frac{\pi^2 P}{4s}\left[\frac{a_n^{\ 2}}{n} + \frac{a_{n+1}^{\ 2}}{n+1}\right] \tag{7}$$

Here, U_f, U_k and U_P are the flexural strain energy of the reinforcement, energy stored in the elastic springs and the energy due to the shortening of the reinforcement, respectively. Similarly, tie spacing is denoted by s. Now, the total energy U is minimized with respect to each of the maximum amplitudes a_n and a_{n+1} to obtain the following equations (eqs. 8 and 9).

$$\frac{\partial U}{\partial a_n} = 0 \Rightarrow \frac{2\pi^4 EI}{n^3 s^3} + \frac{c_i k_n}{4}\sum_{i=1}^{n}\left(1-\cos\frac{2i\pi}{n}\right)^2 - \frac{P\pi^2}{2ns} = 0 \tag{8}$$

$$\frac{\partial U}{\partial a_{n+1}} = 0 \Rightarrow \frac{2\pi^4 EI}{(n+1)^3 s^3} + \frac{c_i k_n}{4}\sum_{i=1}^{n+1}\left(1-\cos\frac{2i\pi}{n+1}\right)^2 - \frac{P\pi^2}{2(n+1)s} = 0 \tag{9}$$

These two simultaneous equations finally yield the required spring stiffness k_n and the corresponding load P. The required spring stiffness for different buckling modes, calculated according to the proposed method, is shown in table 1. The equivalent stiffness (k_{eq}), mentioned in the table, is a dimensionless parameter and multiplying it by $\pi^4 EI/s^3$ gives the required spring stiffness k_n. As expected, the stiffness becomes smaller for higher modes.

TABLE 1. Required spring stiffness for different buckling modes

Mode, n	1	2	3	4	5	6	7	8
k_{eq}	0.7500	0.1649	0.0976	0.0448	0.0084	0.0063	0.0037	0.0031

4. STIFFNESS OF LATERAL TIES

In order to determine the stable buckling mode and buckling length, the effective stiffness of the stirrups with given strength and arrangement has to be evaluated in advance and it should be compared with the calculated required spring stiffness for the corresponding mode. The buckling tendency of the main reinforcement will cause axial tension in the legs of a stirrup. Hence, the stirrup resistance against the lateral expansion is believed to be mainly governed by its axial stiffness. The axial stiffness of each tie leg is $E_t A_t/b$, where E_t, A_t and b are elastic modulus, cross-sectional area and the leg-length of transverse reinforcement, respectively. Assuming the total stiffness of n_l tie legs equally contribute to n_b longitudinal bars that are prone to simultaneous buckling, the restraining stiffness of the tie system effective against buckling of each longitudinal bar can be calculated using equation 10.

$$k_t = \frac{E_t A_t}{b} * \frac{n_l}{n_b} \tag{10}$$

The values of n_l and n_b for some common arrangements of longitudinal and lateral reinforcements are illustrated in figure 4. It can be observed that this definition can be consistently applied to any kind of reinforcement arrangements (multi-legged stirrups, diagonal ties etc.) in rectangular cross section.

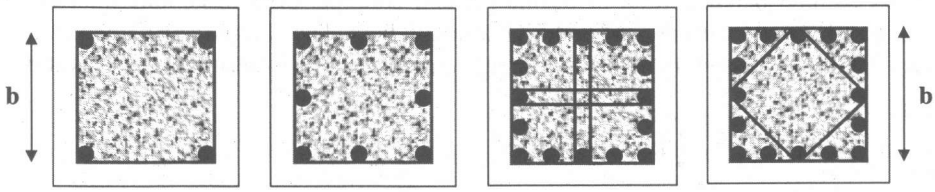

n_b =2; n_l =2 n_b =3; n_l =2 n_b =5; n_l =4 n_b =5; n_l =4

Figure 4. Effective tie stiffness for some common arrangements.

It is to be noticed that the values of n_l and n_b depend on the type of loading. The values shown in figure 4 are for flexural loading, where only the reinforcing bars in one side are prone to simultaneous buckling at an instant. Nevertheless, in case of axial compression, all bars have equal strain and bars in both sides of the stirrup legs tend to buckle outside at the same time. Hence, n_b and n_l in each direction should be determined considering the tie-legs along the direction and longitudinal bars in both sides. Moreover, in case of unsymmetrical arrangement of reinforcements, the tie stiffness and buckling modes of reinforcing bars in two directions are different and using the lower stiffness gives slightly conservative prediction.

5. VERIFICATION AND DISCUSSION

As explained earlier, the effective tie stiffness and the required spring stiffness corresponding to each buckling mode can be determined and they are to be compared with each other to determine the stable buckling mode. Hereafter, the performance of the proposed method is experimentally verified. First, an axially loaded compression member tested by the authors and a laterally loaded flexural column [5] are explained in detail. The details and results of both specimens are listed in table 2 and also illustrated in figure 5.

TABLE 2. Specimen details

	Cylinder	Column
Section	20*20cm	2.4*2.4m
Main bar	6-D13	72-D35
Stirrups	D6@10cm	D19@30cm
n_b ,n_l	6, 2	19, 2
b	16cm	220cm
E_t	200GPa	200GPa
f_y	355MPa	424MPa
$k_t/\pi^4 EI/s^3$	1.0135	0.1015
Mode, n	1	3

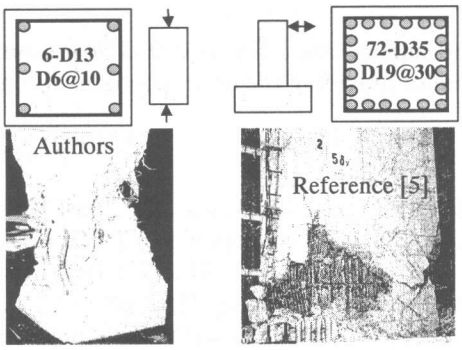

Figure 5. Buckling modes in experiment

It can be observed that the predicted buckling mode of the compression cylinder is one and the buckling length observed in experiment is also equal to tie spacing. Similarly, the reinforcements inside the flexural column were predicted to buckle in the third mode and the

experimental buckling length also seems to be equal to three times tie spacing, showing exact resemblance with the theoretical prediction. For further verification, the predictions according to the proposed method are compared with altogether 45 experimental observations. These experiments include bending tests of beams [3] and columns [5] and compression tests of prisms [2, 4] reinforced with normal and high strength bars. The comparison shown in figure 6 signifies that the proposed method is in fair agreement with the experimental observations.

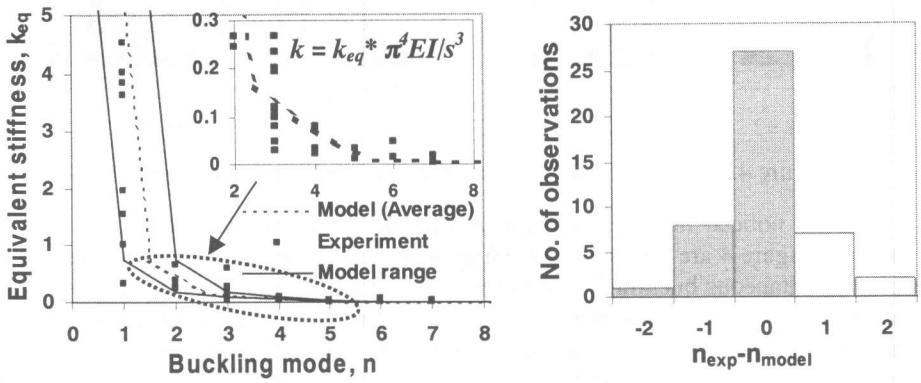

Figure 6. Verification of proposed buckling length prediction method.

6. CONCLUSION

An analytical method to determine buckling length of reinforcing bars inside RC structures is proposed. Comparison with several experimental observations revealed ample evidence of the reliability of this method. This method, if combined with simple stress-strain relationship of bare bar in compression, can be used as a reliable buckling model for reinforcements inside any RC structures. Moreover, this method can also be used for the design of lateral ties to resist extensive buckling of main reinforcement.

ACKNOWLEDGEMENTS

The authors would like to extend their heartfelt acknowledgements to Tepco Research Foundation for providing financial support to accomplish this research.

REFERENCES

1. Dhakal, R. P. and Maekawa, K., "Post-Peak Cyclic Behavior and Ductility of RC Columns," Special Publication of JCI (JCI-C51E), Vol.2, Oct. 1999, pp.151-170.
2. Bresler, B. and Gilbert, P. H., "Tie Requirements for Reinforced Concrete Columns," Journal of ACI, Vol.58, May 1961, pp.555-570.
3. Scribner, C. F., "Reinforcement Buckling in Reinforced Concrete Flexural Members," ACI Journal, June 1986, pp.966-973.
4. Kato, D., Kanaya, J. and Wakatsuki, K., "Buckling Strains of Main Bars in Reinforced Concrete Members," Proceedings of the EASEC-5, 1995, pp.699-704.
5. "Joint Research Report on the Size Effect in the Seismic Performance of Reinforced Concrete Piers," Technical Memorandum of PWRI, No.234, Oct. 1999 (In Japanese).