- Technical paper -

INVESTIGATION OF BOND AND FLEXURAL BEHAVIOR OF FRP REINFORCED CONCRETE UNDER HIGH TEMPERATURE

Thant ZIN*[1], Hiroshi MUTSUYOSHI*[2], Atsushi SUMIDA*[3] and Kazuhito TANABE*[4]

ABSTRACT: This paper presents an experimental study on the behavior of fiber reinforced concrete members exposed to high temperature. Performance of newly developed aramid fibers and carbon fibers impregnated with phenol and cross-bridged polyamonoamide resins were investigated. Thirty two pullout specimens and four fiber reinforced concrete beams were tested to investigate the effect of high temperature on flexural and bond behavior. At a high temperature of 200ºC, carbon fiber reinforced beam was found to perform better as compared to the beam reinforced with aramid fiber.
KEYWORDS: FRP reinforced concrete, high temperatures, flexural strength, bond strength, glass transition temperature.

1. INTRODUCTION

Fiber reinforced polymer (FRP) bars are being used increasingly in construction field where ordinary steel reinforcement is not suitable due to corrosive environments. The FRP reinforcement offers an outstanding combination of properties, such as low weight, high corrosion resistance and high mechanical strength. Although it was found that the behavior of FRP reinforced concrete structures at normal temperature is satisfactory, the mechanical behavior of FRP reinforced concrete members at high temperatures has not been clarified yet. High temperature, such as those due to fires or extremely hot climate, may decrease the properties of these FRP bars.

Ammon et al.[1] reported that a reduction between 80 and 90% in the bond strength of FRP bars occures as the temperature increases from 20 to 250ºC. Moreover, Wang et al. [2] reported a reduction of 75% takes place in the flexural strength of FRP beams as the temperature increases from room temperature to 300ºC. The mechanical properties such as the strength and the stiffness of polymers are known to decrease significantly as the temperature is increased to its glass transition temperature (T_g) [3]. At that point, the resin becomes no longer able to transfer stresses from the fiber to concrete leading to bond failure. To improve the fire resistance of FRP reinforced concrete member, FRP bar needs to be impregnated with the resins having higher glass transition temperature. Two types of aramid and carbon fibers impregnated with phenol and cross-bridged polyamonoamide resins (CP3) were therefore developed.

In order to apply the FRP rebars safely to concrete structures in case of fire, the bond and flexural behavior of FRP reinforced concrete members subjected to high temperatures are required to be clearly understood. The objective of this study is to investigate the bond behavior of newly developed FRP rebars and the flexural behavior of the FRP reinforced concrete beams under elevated temperature.

The experimental work was carried out in two phases. In the first phase, pullout tests were performed under high temperature to determine the bond strength of the FRP reinforcing bar. In the second phase, monotonic loading test was carried out on the FRP reinforced concrete beams to determine flexural behavior as well as deflection characteristics.

*1 Department of Civil Engineering, Saitama University, Graduate student, Member of JCI
*2 Department of Civil Engineering, Saitama University, Professor,Dr.,PE, Member of JCI
*3 Kevlar Product & Application Technology Dept., Du Pont-Toray Co.,Ltd., Director-Special Assignment
*4 Department of Civil Engineering, Saitama University, Graduate student

2. BOND STRENGTH OF FRP UNDER HIGH TEMPERATURE

2.1 EXPERIMENTAL PROGRAM

(1) Reinforcing materials

Four types of FRP rebars, fabricated by aramid fiber and carbon fiber were tested and compared with ordinary deformed steel rebars. The test temperatures were room temperature, 100ºC, 150ºC, 200ºC, 250ºC, 300ºC and 350ºC. All the FRP rebars used in the experiment were of braided shape which provides a greater friction force and rigidity. The glass transition temperature (T_g) of each resin type and the physical properties are shown in Table 1. The tensile strengths of aramid fiber and carbon fibers are 1.4 kN/mm^2 and 2.07 kN/mm^2, respectively. Moreover, the elastic moduli of aramid fiber and carbon fiber are 68.6 kN/mm^2 and 156.8 kN/mm^2, respectively.

Table 1. Physical properties of FRP rebars and steel

Rebar		Nominal Dia. (mm)	Glass transition Temp. (ºC)	Thermal expansion Coefficient (x10^{-6})/ºC
Fiber	Resin			
Aramid(A)	Phenol(PH)	13.99	250	-2.0
Aramid(A)	CP3*	15.18	230	
Carbon(C)	Phenol(PH)	12.98	250	0.6
Carbon(C)	CP3*	13.37	230	
Steel (D13)		12.7	-	12.0

* cross-bridged polyamonoamide

(2) Concrete

High early strength concrete with 14-day compressive strength of 40MPa was used. Slump of concrete was 10±2 cm which allowed for both good workability and good compaction around the bars without excess bleeding. The maximum aggregate size used was 20mm. The coefficient of thermal expansion for concrete is 10x10^{-6}/ºC.

2.2 TEST SPECIMEN AND TEST SETUP

Fig.1 shows the details of the test specimen. A concrete cylinder with a diameter of 150 mm and a height of 300 mm were prepared in which the rebars were placed vertically at the center before casting. The bonded length of 44mm was used for FRP rebars in accordance with {JSCE E539-1999} [6]. The bonded portion was set at the center of 300mm long bar. Steel tubes with a diameter of 28mm were embedded in both ends of the test specimen to provide un-bonded covers. Three thermocouples were placed at the specified distances to measure the temperature of the rebar. Besides, the strain gage was attached to the FRP bar at 40 mm outside the top surface of concrete test specimen to prevent its damage due to high temperature. An electric heating device was used to heat the concrete specimens in order to attain the specified temperatures. Nominal bond strength (τ) was calculated using Eq.1 assuming that the bond stress is equally distributed throughout the bonded length *l*.

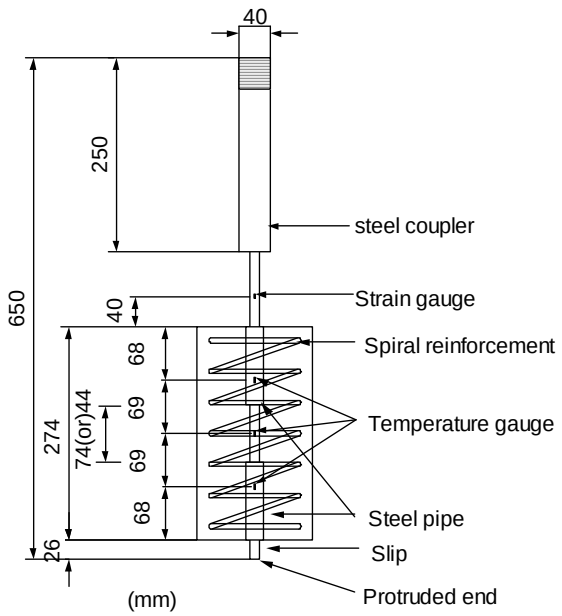

Fig. 1 Details of pullout specimen

$$\tau = \frac{P}{\pi d l} \tag{1}$$

where d = rebar nominal diameter; *l*= bonded length and *P* = instant load .

2.3 RESULTS AND DISCUSSIONS

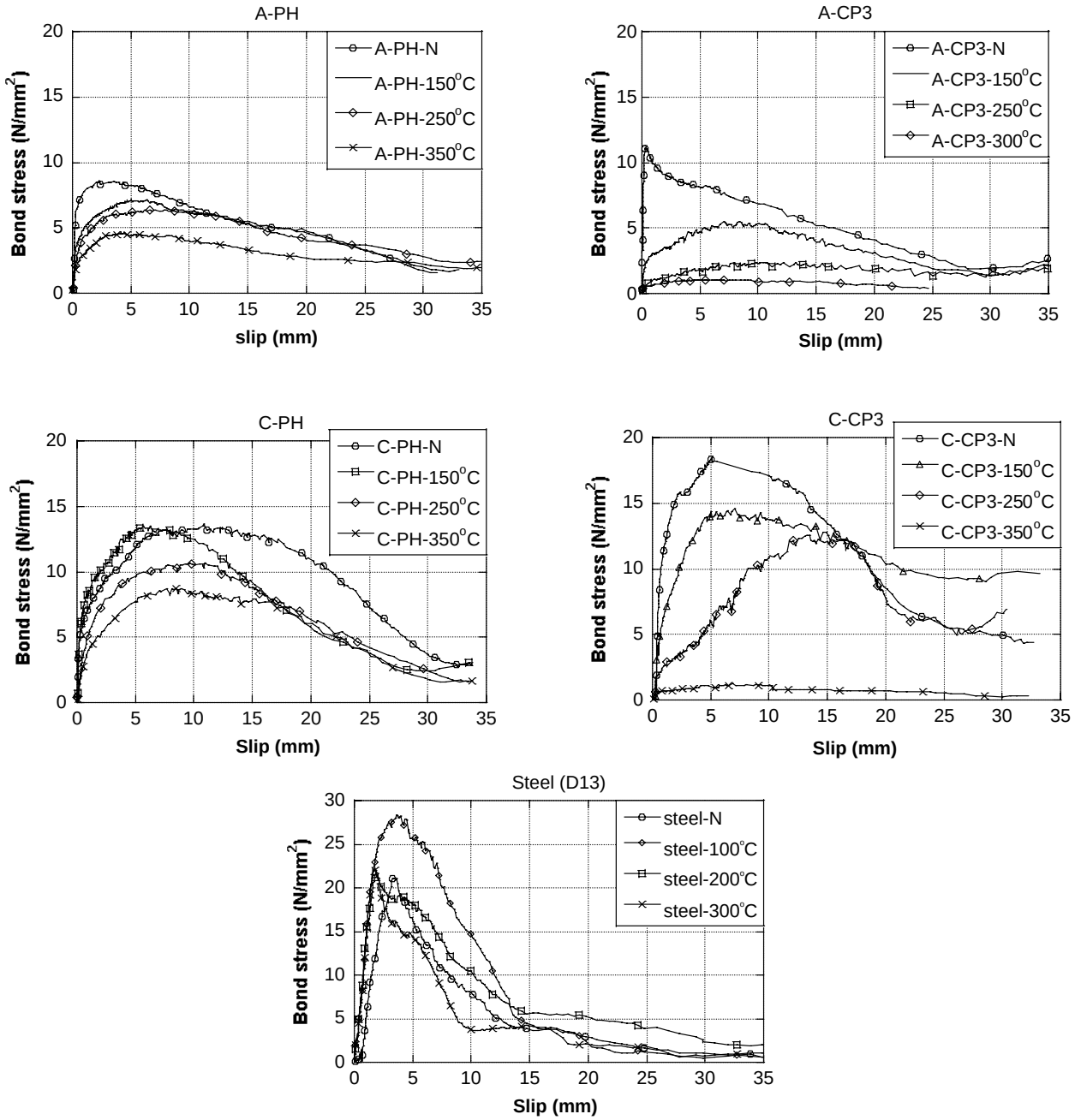

Fig. 2 Bond stress and slip at varied temperatures in A-PH, A-CP3, C-PH, C-CP3 and steel

Fig. 2 shows relationship between bond stress and slip of FRP rebars and steel at various temperatures. The bond stress at room temperature of A-PH, A-CP3, C-PH and C-CP3 were found to be 8.53, 10.72, 13.65 and 19.12 N/mm^2 respectively. These values are smaller as compared to that of steel rebar (21.1 N/mm^2). For A-PH series, the maximum bond stresses at normal temperature and 100ºC were nearly the same. At 250ºC, the maximum bond strength reduced to 75% whereas 70% reduction in bond strength was observed as the temperature was raised to 300ºC. In A-CP3, the bond strength showed only 50% at the temperature of 170ºC which showed a sharp degrading of bond strength as the temperature increased. In C-PH series, the strength still endured about 80% of normal strength at 250ºC. Reduction in the bond strength of steel with increase in temperature was also shown in Fig.2. A moderate loss of bond strength was found in steel and the values remained relatively high (85%) even at 200ºC.

The residual bond strengths at high temperatures for all test series are shown in Fig.3. It is observed that Aramid and Carbon fibers with phenol resin give enough strength under high temperature whereas those fibers with CP3 resin deteriorate as temperature increases. Reduction in the bond strength is

mainly attributed to the softening of bond matrix which is initiated at the glass transition temperature of the resin.

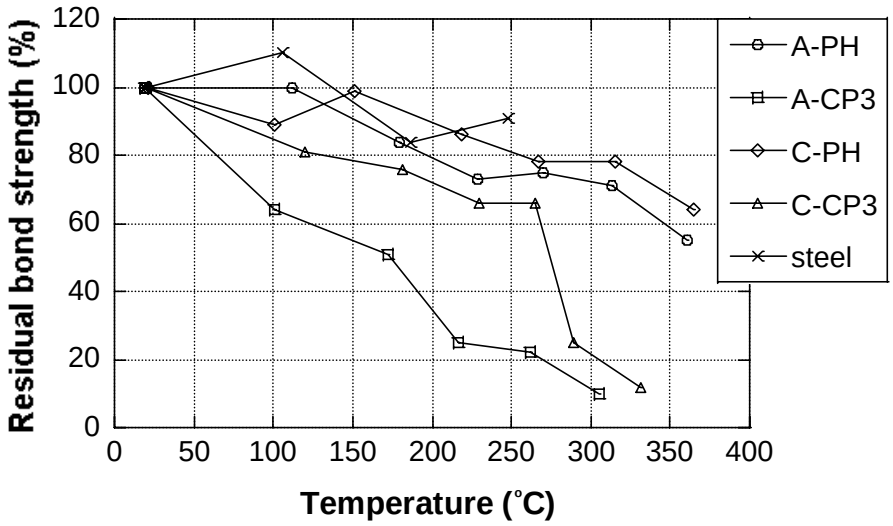

Fig. 3 Relation between residual bond strength at high temperatures for bond tests

3. FRP REINFORCED CONCRETE BEAM UNDER HIGH TEMPERATURE

3.1 EXPERIMENTAL PROGRAM AND TEST SETUP

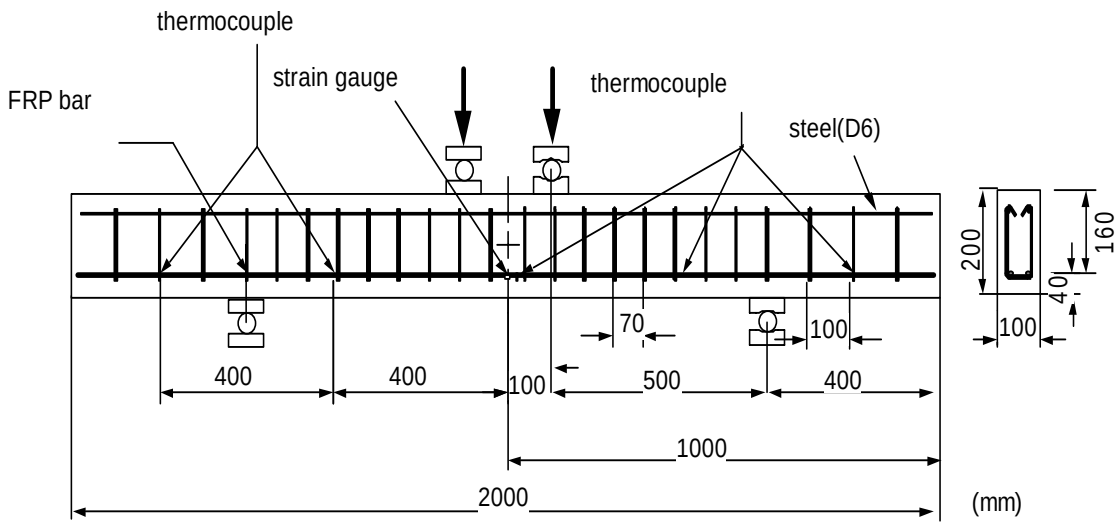

Fig. 4 Schematic details of beam

The details of beam section are shown in Fig.4. Two series of simply supported concrete beams reinforced by using C-PH and A-PH rebars were tested at room temperature and 200ºC. Geometrical dimensions and reinforcement arrangements were designed to have a dominant flexural behavior. The beam cross section was 100mm x 200mm and the length was 2000mm. Deformed bars with 6mm in diameter were used as stirrups and top steel to support the main reinforcement. Stirrup spacing of 70 mm was provided at shear span to prevent shear failure whereas the spacing outside the support was 100mm.

Prior to casting of the beams, five sets of thermocouples and one strain gauge were installed on each FRP rebars in order to monitor the test temperatures and local strain of the bars. All the specimens were subjected to identical four point bending test. Monotonic loading was applied by using a hydraulic loading jack up-to the failure of the beams.

3.2 RESULTS AND DISCUSSIONS

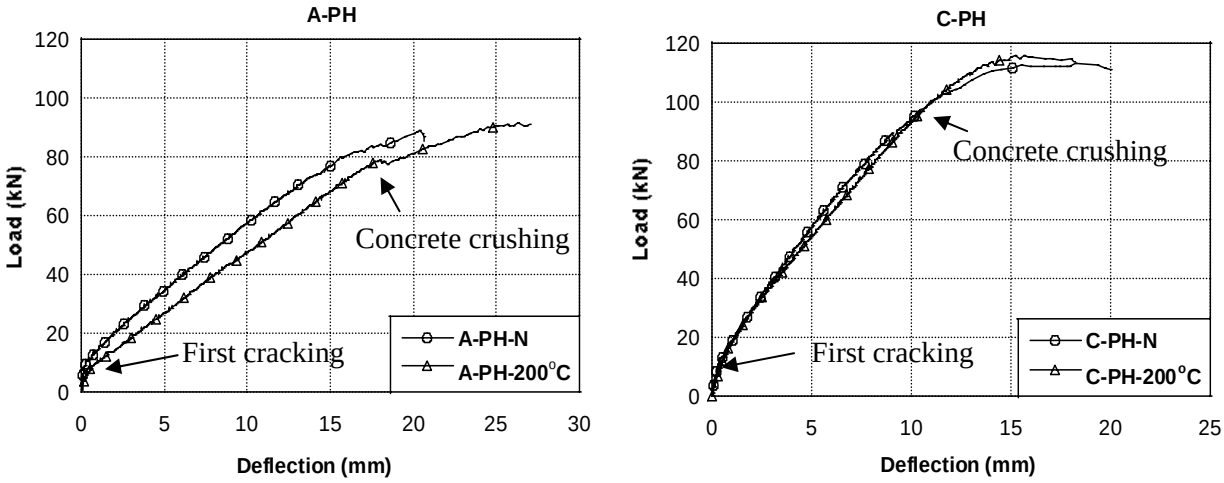

Fig. 5 Effect of high temperatures on loading capacity of FRP reinforced concrete beams

(1)Load and deflection behavior

Fig.5 illustrates the relationship between load and mid-span deflection of A-PH and C-PH FRP reinforced concrete beams at room temperature and 200ºC. In A-PH-series at room temperature, the deflection varied linearly with the load before the occurrence of the first crack. As load increased after cracking, the substantial reduction in member stiffness was observed. The slope of the curve also decreased until it reached the max load where the crushing of concrete occurred in the compression zone. Although the compression concrete was crushed, the load carrying capacity was still increased until it reached the ultimate capacity. Although nature of the curve A-PH at 200ºC was nearly the same as the one in room temperature, the load was relatively reduced with increasing deflection due to the deterioration of bond between concrete and the resin affected by high temperature. Although the maximum load at 200ºC was higher than the one at normal temperature, the deflection was apparently large in 200ºC. The failure mode for both series was flexural failure with crushing of the concrete in compression zone. In C-PH series, the behavior of load and deflection at normal temperature and 200ºC were relatively same. It showed that the bond between concrete and resin had not been deteriorated in C-PH series. The maximum load was recorded at concrete crushing state and the rigidity of the section was greatly reduced over this load. Further, small increase in load was observed as the FRP was yet in elastic state. Table 2 shows the load at concrete crushing, ultimate load and failure mode for both A-PH series and C-PH series.

Table 2. Maximum load and failure mode

Beam Series	Test Temperature (°C)	Concrete crushing		Ulatimate stage		Failure mode
		Load(kN)	Deflection (mm)	Load(kN)	Deflection (mm)	
A-PH	Normal	73.0	13.8	86.8	20.6	Flexural failure with concrete crushing in compression zone
A-PH	200	78.8	18.7	91.5	28.0	
C-PH	Normal	89.3	9.0	113.0	16.6	
C-PH	200	95.3	10.3	115.8	16.0	

(2)Crack behavior

The details of crack patterns for A-PH series and C-PH series at varied temperatures are shown in Fig.6. Tension cracks initially formed at the tensile region of the beam beneath the loading point. As load was increased gradually, the cracks widened progressively and propagated upward through the cross sections. Heating the test beam to 200ºC, many tiny cracks were observed on top surface of the beam in both series. In A-PH at normal temperature, the first crack was seen at the load of 9.5kN whereas at 200ºC the first crack appeared at the load of 1.8 kN. The cracks continued to extend upward and some other cracks propagated from both sides of the loading point as the load increased.

In C-PH at normal temperature, the first crack appeared at the load of 9.5 kN while at 200ºC the first

crack took place at the load of 2.0 kN. The following cracks continued to extend upward and some other cracks propagated from both sides of the loading point as the load increased. In addition, the FRP rebars did not yield while some stretching accompanied by fraying was found to occur.

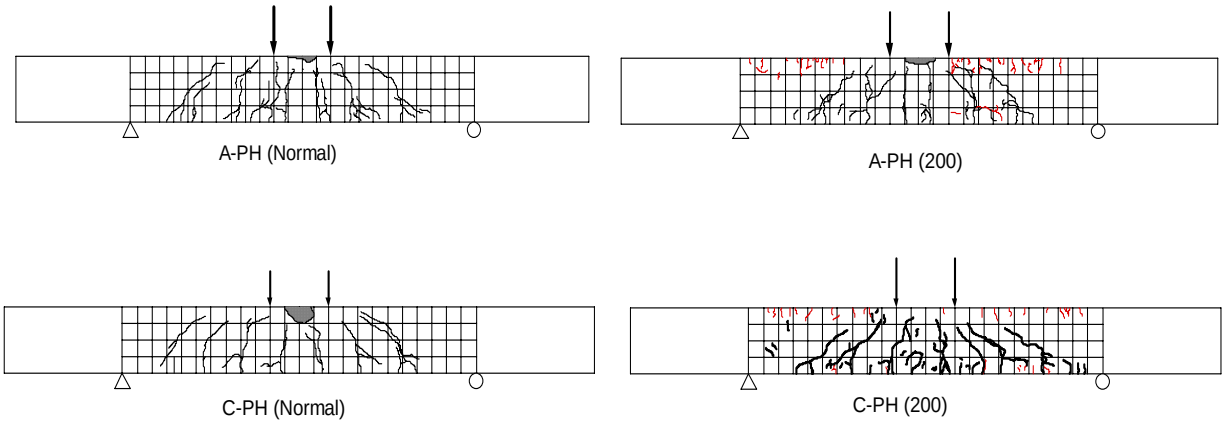

Fig. 6 Crack patterns of A-PH and C-PH FRP reinforced beams at varied temperatures

4. CONCLUSIONS

The bond and flexural behavior of FRP reinforced concrete members under high temperature were investigated in this paper. Pullout test of different types of FRP rebars were carried out at various temperatures up to 350ºC. Moreover, Aramid-phenol and carbon-phenol fiber reinforced concrete beams were tested at room temperature and 200ºC. From this study following conclusion can be drawn.

1. Bond strengths of fibers with phenol resins showed less deterioration than that of fibers with CP3 resins.
2. Bond strengths of each resin depend on its glass transition temperature.
3. Flexural strength of C-PH fiber reinforced concrete beams did not degrade at high temperature.
4. The C-PH and A-PH fibers can be effectively used in FRP reinforced concrete beams under high temperature up to 200ºC.

REFERENCES

1. Ammon,K., Nata B. and Lawrence C.B., “Effect Of High Temperature On Bond Strength Of FRP Rebars,” J. of Composites for Construction., ASCE,Vol.3, No.2, May,1999, pp.73-81.
2. Wang, N., and Evans, J.T., “Collapse of continuous fiber composite beam at elevated temperatures,” Composites,Vol.26, No.1, 1995, pp.56-61.
3. Fried, J.R. (1995). Polymer science and technology. Prentice-Hall, Englewood Cliffs, N.J., 167-169
4. Malhotra,L.(1982). Design of fire-resistance structures, Surrey University Press, London, 48-77
5. Aiello M.A. and Ombres L., “Load-Deflection Analysis of FRP Reinforced Concrete Flexural Members,” J. of Composites for Construction., ASCE, Vol.4, No.4, November, 2000, pp.164-171.
6. Standard specifications for concrete structures-2002, Test methods and specifications, JSCE, (2002), “Test method for bond strength of continuous fiber reinforcing materials of bar,” pp.98-100.